SONY

SOLID-STATE MEMORY CAMCORDER

PMW-200
PMW-EX280

XDCAM SxS HDMI

MPEG HD422 Exmor

SERVICE MANUAL

1st Edition (Revised 1)

Section 5
Spare Parts

5-1. Note on Repair Parts

1. Safety Related Components Warning

WARNING

Components marked ⚠ are critical to safe operation. Therefore, specified parts should be used in the case of replacement.

2. Standardization of Parts

Some repair parts supplied by Sony differ from those used for the unit. These are because of parts commonality and improvement.

3. Stock of Parts

Parts marked with “o” at SP (Supply Code) column of the spare parts list may not be stocked. Therefore, the delivery date will be delayed.

4. Harness

Harnesses with no part number are not registered as spare parts.

1. 安全重要部品

⚠警告

⚠印のついた部品は安全性を維持するために重要な部品です。したがって，交換する時は必ず指定の部品を使ってください。

2. 部品の共通化

ソニーから供給する補修用部品は，セットに使われているものと異なることがあります。
これは部品の共通化，改良等によるものです。

3. 部品の在庫

部品表の SP（Supply code）欄に “o” で示される部品は在庫していないことがあり，納期が長くなることがあります。

4. ハーネス

部品番号の記載されていないハーネスは，サービス部品として登録されていません。

5-2. Exploded Views

Overall

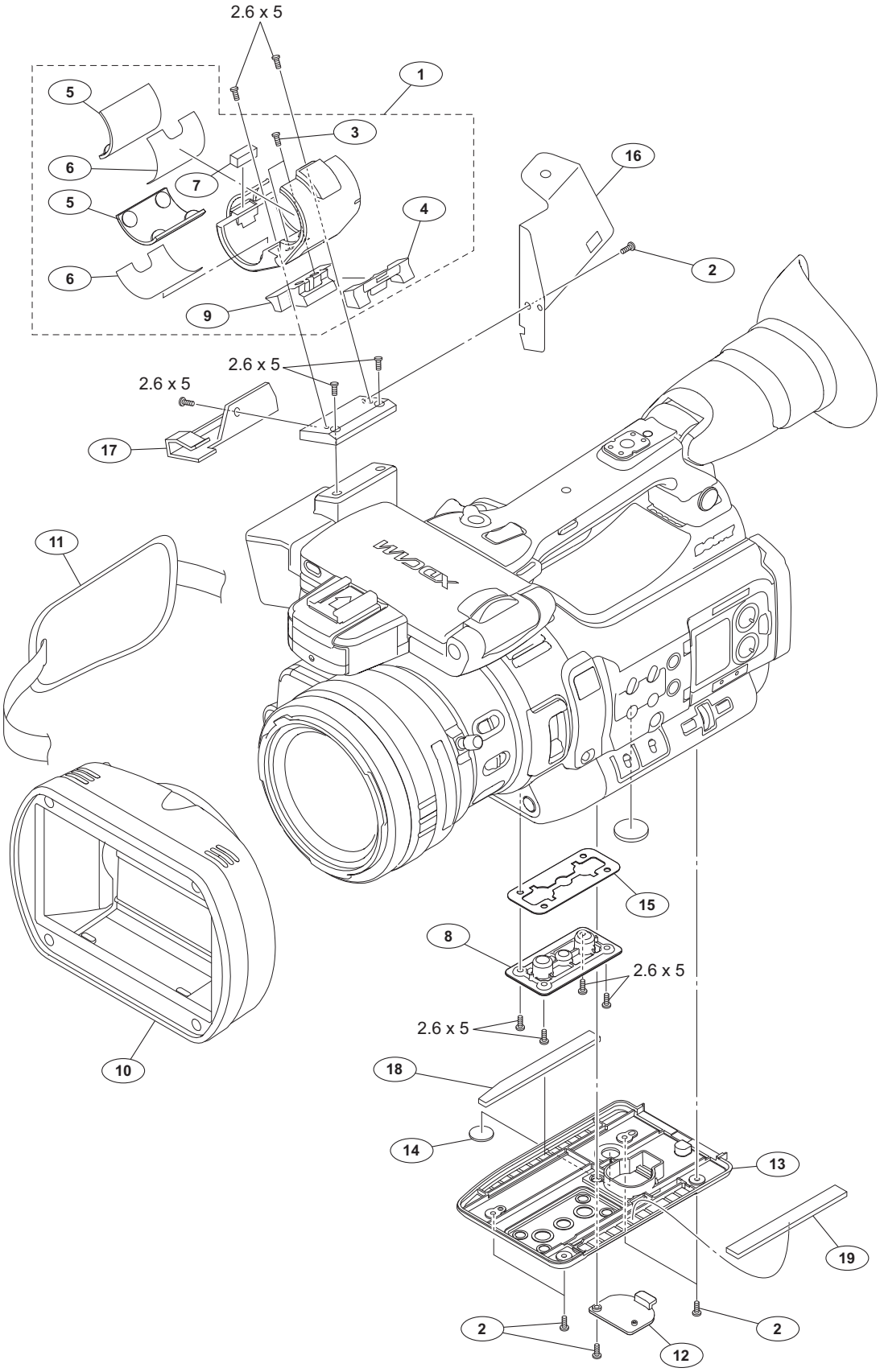

Overall

No.	Part No.	SP	Description
1	X-2342-570-5	s	HOLDER (93000) ASSY, MICROPHONE
2	2-630-005-01	s	SCREW (M2), NEW TRUSTER, P2
3	3-080-206-21	s	SCREW, TAPPING, P2
4	3-284-075-03	s	COVER, MICROPHONE HOLDER RUBBER
5	3-284-080-02	s	RUBBER, MICROPHONE
6	3-284-081-11	s	SHEET, RUBBER ADHESIVE
7	3-284-621-11	s	CUSHION, MICROPHONE HOLDER
8	4-119-234-11	s	WASHER, TRIPOD
9	4-119-861-01	s	RUBBER (93000), HOLDER
10	4-179-065-01	s	HOOD LENS
11	4-275-256-01	s	BELT, GRIP
12	4-427-934-02	s	BATTERY LID
13	4-427-935-02	s	PANEL, BOTTOM
14	4-427-940-01	s	COVER USER TAP
15	4-433-453-01	s	SPACER, BOTTOM
16	4-446-349-01	s	BRACKET, WIFI
17	4-446-827-01	s	HOLDER, MICROPHONE
18	4-447-306-01	s	CUSHION (B), BOTTOM
19	4-447307-01	s	CUSHION (C), BOTTOM
	7-627-556-58	s	SCREW +P 2.6X5

Inside Panel Assembly

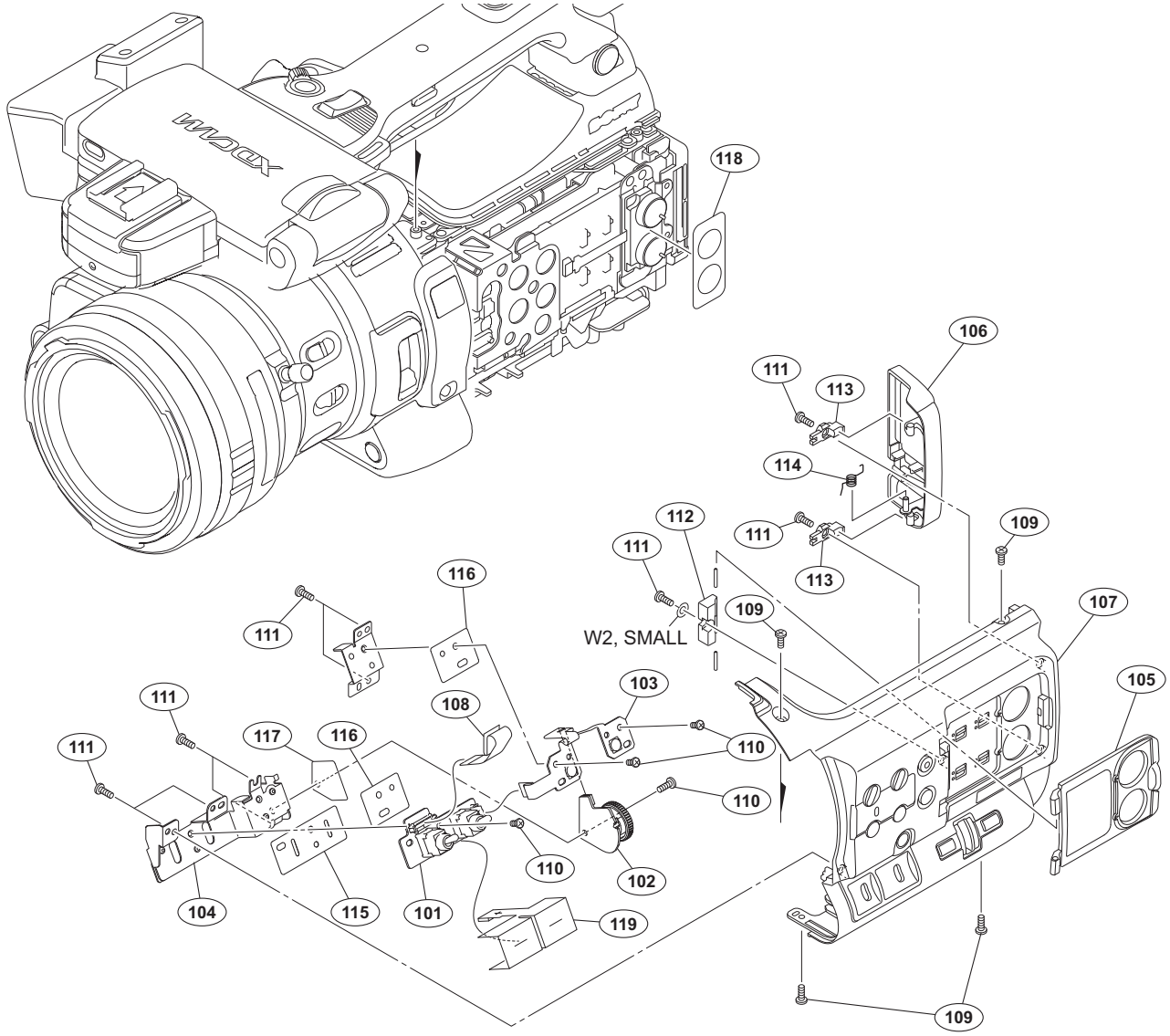

No.	Part No.	SP	Description
101	A-1890-562-A	s	MOUNTED CIRCUIT BOARD, SW-1577
102	A-1890-563-A	s	MOUNTED CIRCUIT BOARD, SW-1578
103	A-1890-564-A	s	MOUNTED CIRCUIT BOARD, SW-1579
104	X-2584-460-1	s	BRACKET (A) ASSY, SWITCH
105	X-2584-461-2	s	AU COVER SUB ASSY
106	X-2585-758-1	s	LID ASSY, SXS
107	X-2585-773-1	s	PANEL SUB ASSY, INSIDE
108	1-846-287-12	s	CABLE, FLEXIBLE FLAT (15 CORE)
109	2-630-005-01	s	SCREW(M2), NEW TRUSTER, P2
110	3-056-233-21	s	SCREW (M2), LOCK ACE, P2
111	3-080-206-21	s	SCREW, TAPPING, P2
112	4-428-406-03	s	RETAINER, AU SHAFT
113	4-428-407-01	s	RETAINER, LID SHAFT
114	4-428-408-01	s	SPRING, HELICAL TORSION COIL
115	4-446-019-01	s	SW INSULATING SHEET H
116	4-428-410-01	s	SW INSULATING SHEET B
117	4-428-411-01	s	SW INSULATING SHEET C
118	4-428-985-01	s	COVER, AU VOLUME
119	4-446-018-01	s	SHEET (H), SW CONDUCTIVITY
	7-688-001-02	s	W 2, SMALL

Outside Panel Assembly

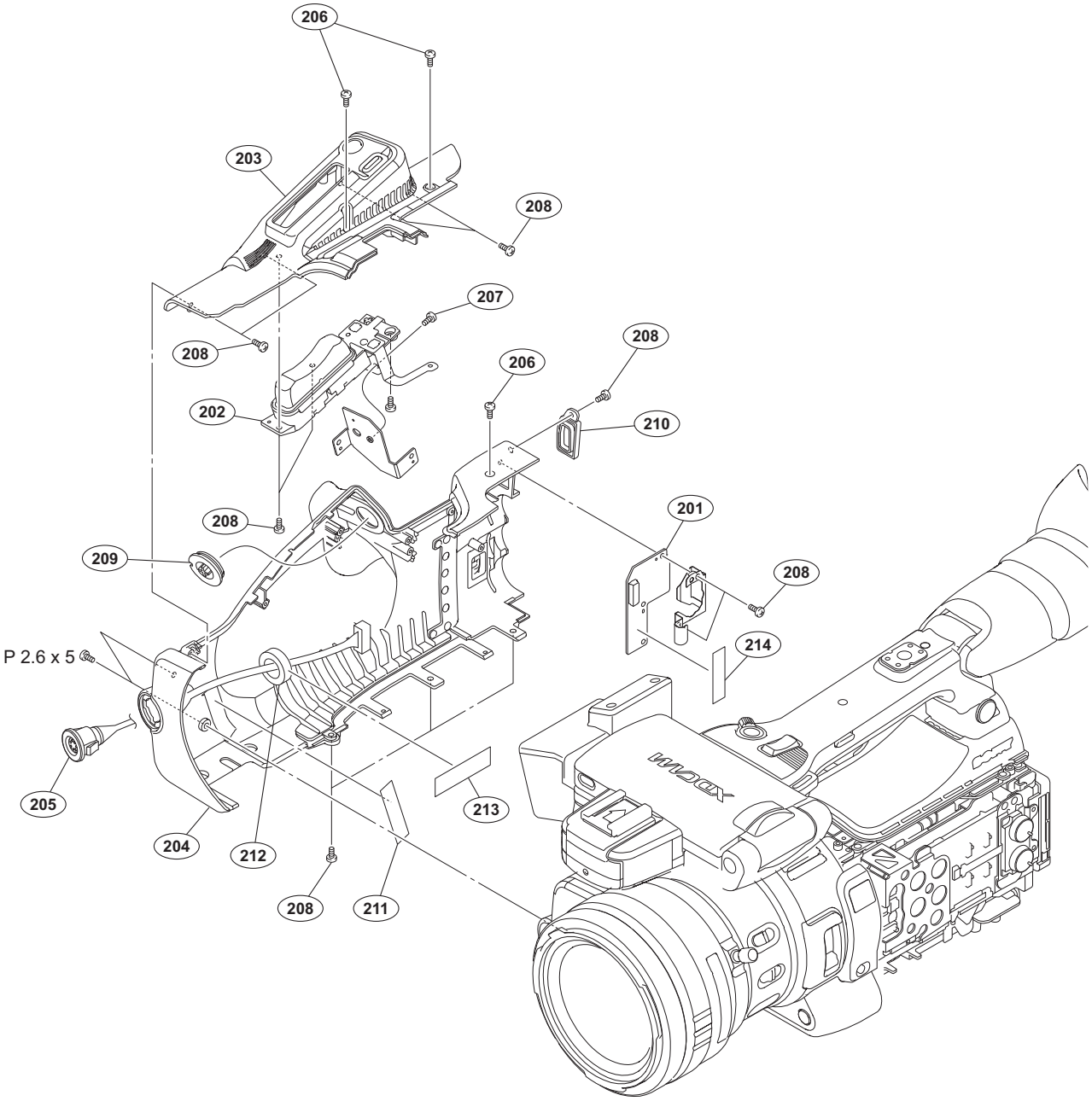

No.	Part No.	SP	Description
201	A-1885-813-A	s	MOUNTED CIRCUITE BOARD, IO-254
202	A-1899-214-A	s	SEESAW ASSY, ZOOM
203	X-2585-656-1	s	COVER ASSY, ZOOM SEESAW
204	X-2585-657-1	s	PANEL SUB ASSY, OUTSIDE
205	1-968-639-11	s	SUB HARNESS (DEMAND 8P)
206	2-630-005-01	s	SCREW(M2),NEW TRUSTER,P2
207	3-056-233-21	s	SCREW (M2), LOCK ACE, P2
208	3-080-206-21	s	SCREW, TAPPING, P2
209	4-410-288-01	s	BUTTON, REC
210	4-441-559-01	s	CAP, WIFI USB
211	4-414-598-01	s	TAPE (12X35)
212	1-759-071-11	s	CORE, FERRITE
213	4-119-886-01	s	TA;PE (13X50)
214	4-446-016-01	s	TAPE AS (0720)
	7-627-556-58	s	SCREW +P2.6X5

SxS Slot Assembly

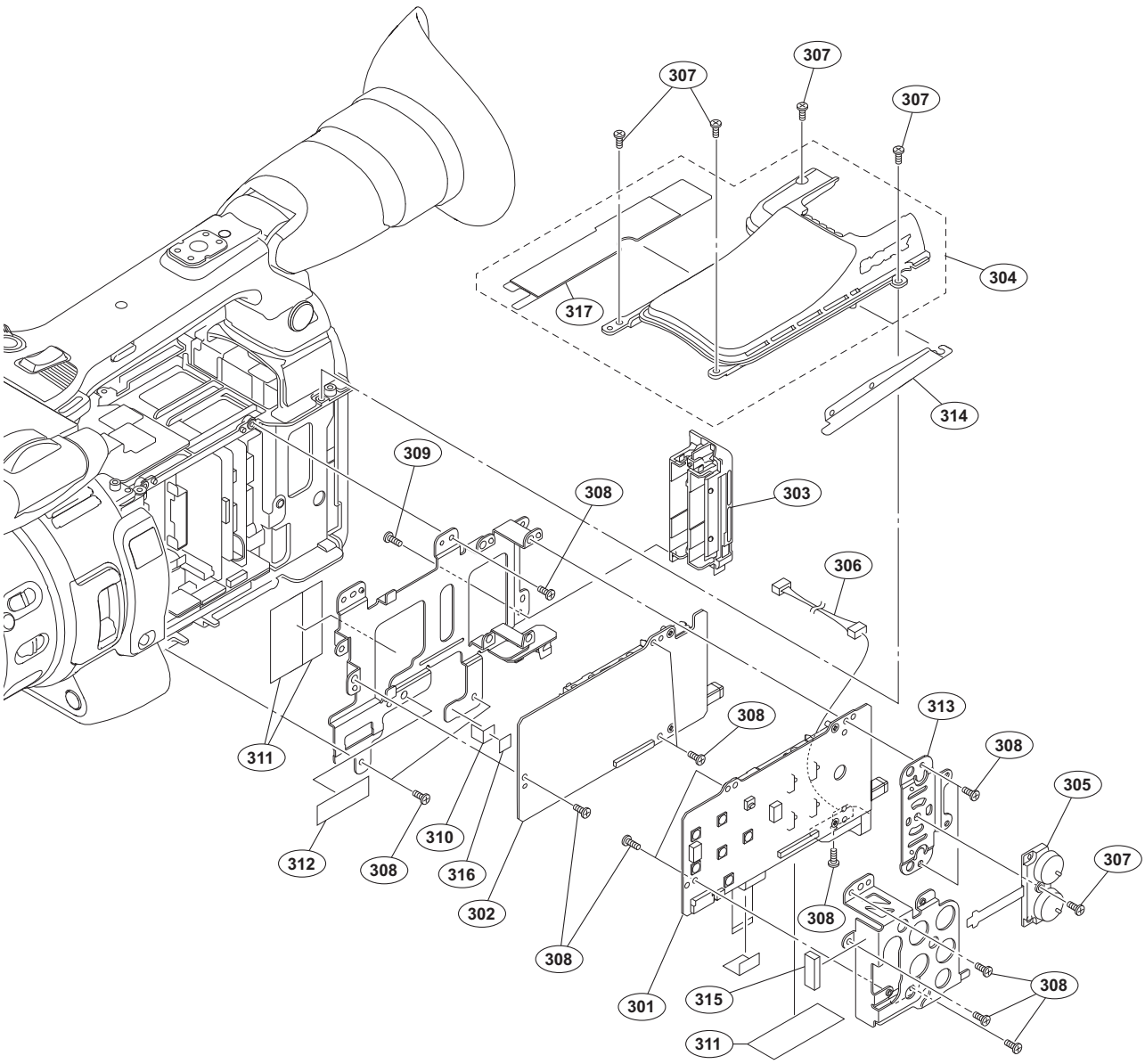

No.	Part No.	SP	Description
301	A-1888-559-A	s	MOUNTED CIRCUIT BOARD, SWC-54
302	A-1891-131-A	s	MOUNTED CIRCUIT BOARD, EC-75
303	X-2584-450-2	s	ESCUTCHEON ASSY, SXS
304	X-2584-469-1	s	TOP PANEL ASSY
305	1-480-457-41	s	BLOCK, AU VOLUME
306	1-967-679-11	s	HARNESS, SUB (LCD DET)
307	2-630-005-01	s	SCREW (M2), NEW TRUSTER, P2
308	3-056-233-21	s	SCREW (M2), LOCK ACE, P2
309	3-080-206-21	s	SCREW, TAPPING, P2
310	3-278-255-01	s	TAPE (BT)
311	3-878-657-01	s	TAPE 50
312	4-414-598-01	s	TAPE (12X35)
313	4-428-300-01	s	PLATE, AU HOLD
314	4-428-399-01	s	SHEET (IN), WATERPROOF
315	4-435-865-01	s	GASKET (G), MAIN
316	4-446-005-01	s	GASKET MAIN L
317	4-447-332-01	s	SHEET (J), WATERPROOF

Front Panel Assembly

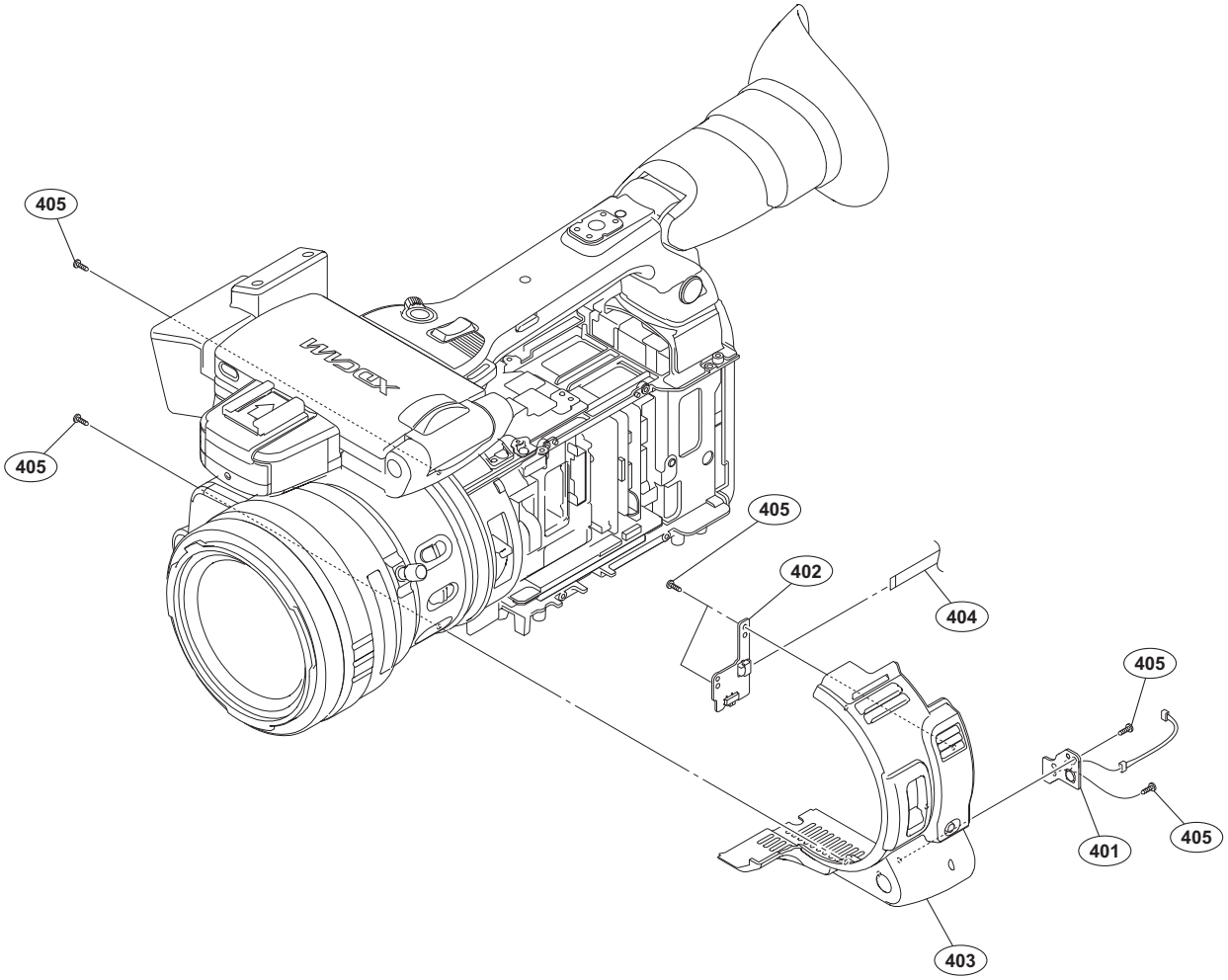

No.	Part No.	SP	Description
401	A-1885-812-A	s	MOUNTED CIRCUIT BOARD, SW-1559
402	A-1885-984-A	s	MOUNTED CIRCUIT BOARD, SW-1573
403	X-2585-655-1	s	PANEL SUB ASSY, FRONT
404	1-846-304-11	s	CABLE, FLEXIBLE FLAT (6 CORE)
405	3-080-206-21	s	SCREW, TAPPING, P2

Rear Panel Assembly-1

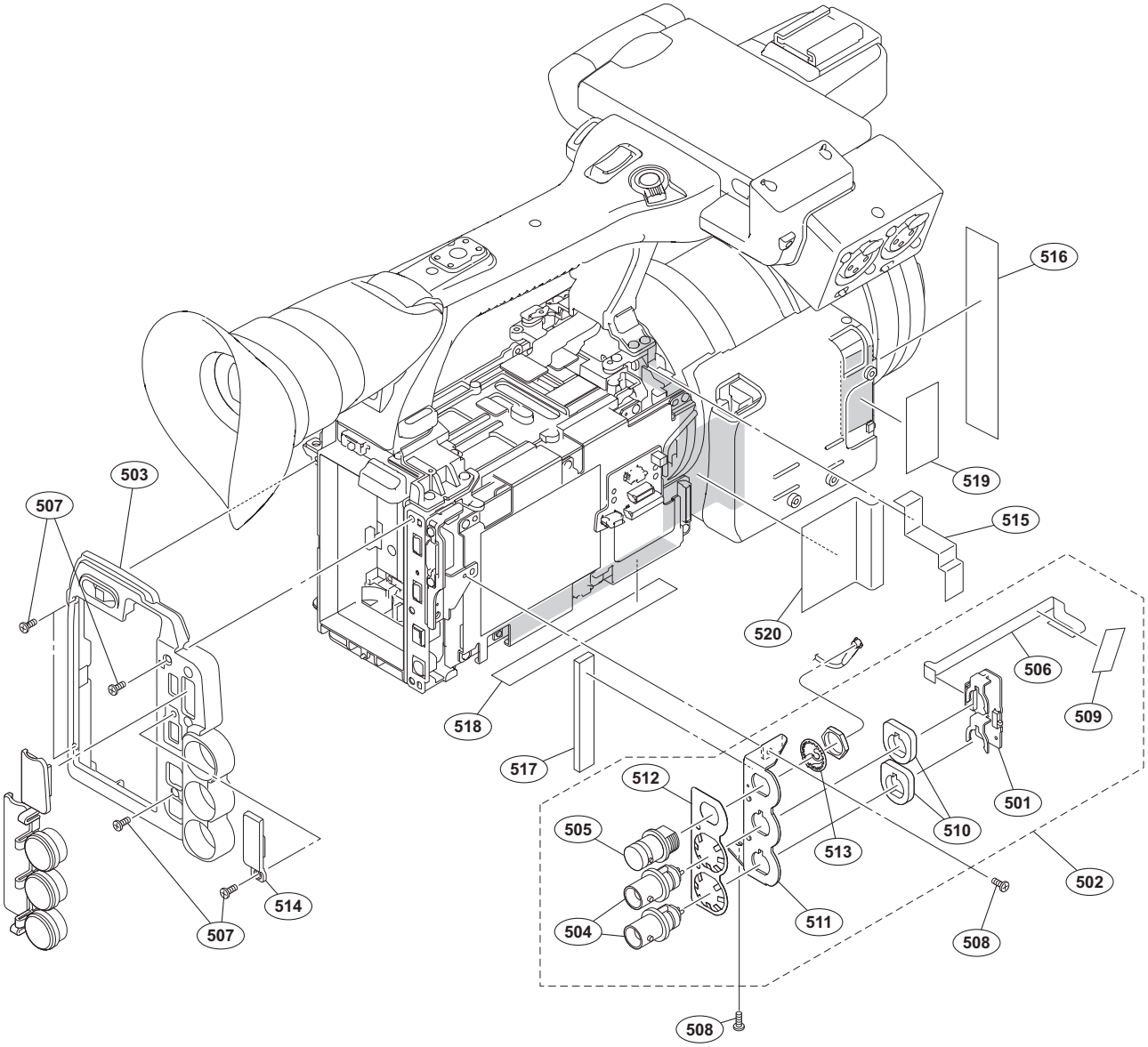

No.	Part No.	SP	Description
501	A-1888-558-A	s	MOUNTED CIRCUIT BOARD, IO-255
502	A-1899-219-A	s	ASSY IO-255
503	X-2584-455-3	s	REAR PANEL ASSY
504	1-766-380-11	s	CONNECTOR, COAXIAL (BNC TIPE)
505	1-784-240-11	s	CONVERTER, COAXIAL CONNECTOR
506	1-846-285-11	s	CABLE, FLEXIBLE FLAT (10 CORE)
507	2-630-005-01	s	SCREW(M2), NEW TRUSTER,P2
508	3-056-233-21	s	SCREW (M2), LOCK ACE, P2
509	3-278-255-01	s	TAPE (BT)
510	4-428-365-01	s	SPACER, V-OUT
511	4-428-366-01	s	BRACKET BNC
512	4-428-367-01	s	PLATE, BNC GND
513	4-428-368-01	s	WASHER, BNC COAXIAL FIXED
514	4-428-375-01	s	USB COVER
515	4-446-001-01	s	TAPE (H), FRAME CONDUCTIVE
516	4-446-003-01	s	TAPE (H), LENS CONDUCTIVE
517	4-446-004-01	s	GASKET MAIN K
518	4-446-006-01	s	GASKET MAIN M
519	4-446-014-01	s	TAPE AS (2040)
520	4-446-017-01	s	TAPE (H), DCP CONDUCTIVE

Rear Panel Assembly-2

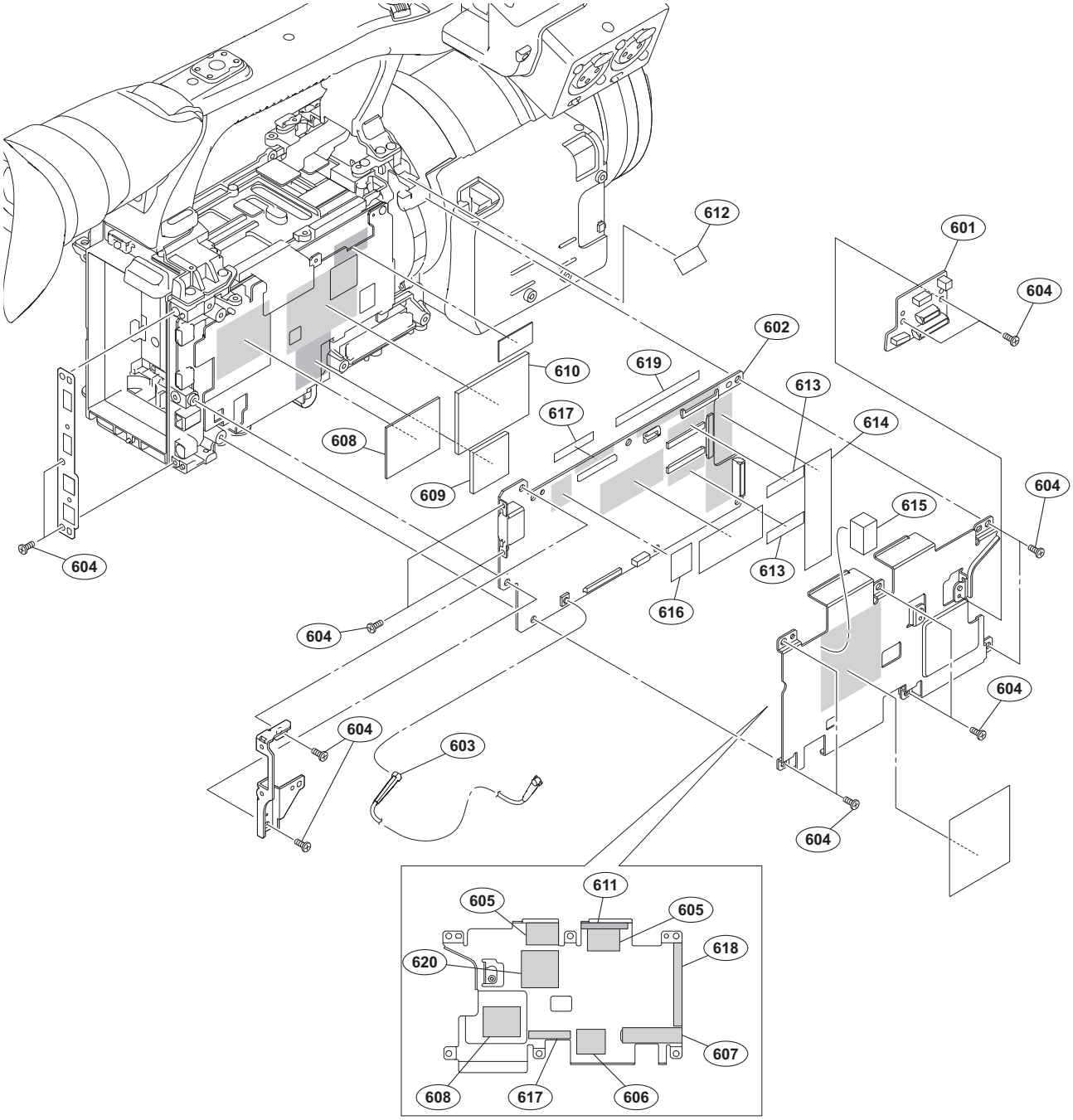

No.	Part No.	SP	Description
601	A-1885-814-A	s	MOUNTED CIRCUIT BOARD, CN-3540
602	A-1886-115-A	s	MOUNTED CIRCUIT BOARD, DCP-56
603	1-837-302-11	s	CABLE ASSEMBLY, COAXIAL
604	3-056-233-21	s	SCREW (M2), LOCK ACE, P2
605	4-427-941-01	s	CUSHION CONNECTOR (MAIN)
606	4-427-951-02	s	RADIATION SHEET C
607	4-427-952-02	s	RADIATION SHEET D
608	4-427-953-02	s	RADIATION SHEET E
609	4-427-954-02	s	RADIATION SHEET F
610	4-427-956-02	s	RADIATION SHEET H
611	4-428-812-01	s	GASKET (D), MAIN
612	4-433-496-01	s	TAPE, FP CONDUCTIVE
613	3-278-255-01	s	TAPE (BT)
614	4-119-886-01	s	TAPE (13X50)
615	4-435-865-01	s	GASKET (G), MAIN
616	4-446-002-01	s	TAPE AS (1515)
617	4-446-010-01	s	CUSHION MAIN A
618	4-446-011-01	s	CUSHION MAIN B
619	4-446-012-01	s	CUSHION MAIN C
620	4-446-013-01	s	CUSHION MAIN D

Handle-1

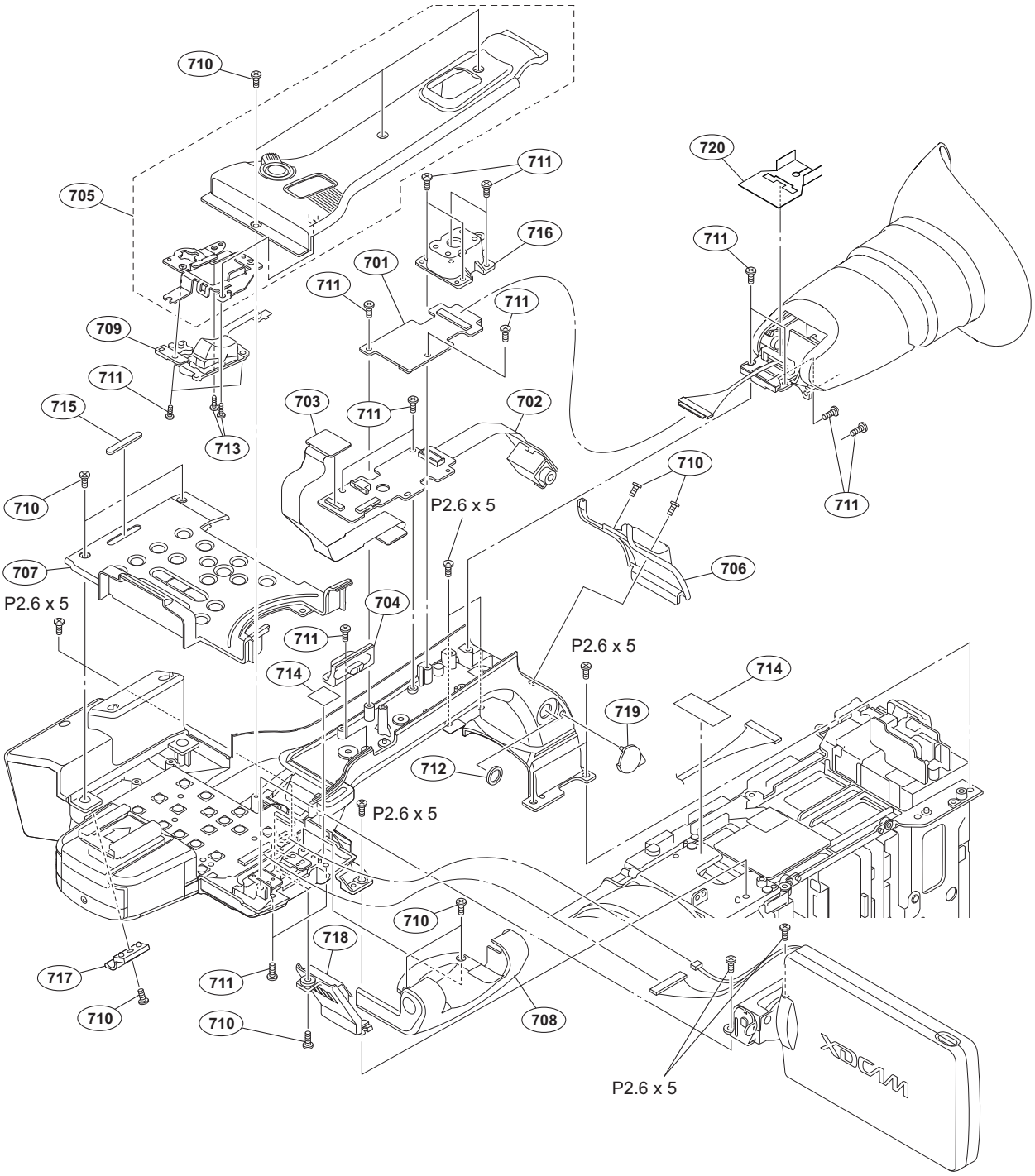

No.	Part No.	SP	Description
701	A-1885-809-A	s	MOUNTED CIRCUIT BOARD, DR-670
702	A-1890-560-A	s	MOUNTED CIRCUIT BOARD, RM-237
703	A-1890-567-A	s	MOUNTED CIRCUIT BOARD, HN-404
704	X-2584-437-1	s	KNOB ASSY, ZOOM SELECTION
705	X-2584-438-1	s	CASE ASSY, HANDLE (UPPER)
706	X-2584-439-1	s	CABINET ASSY, HANDLE (REAR)
707	X-2584-441-3	s	PANEL ASSY, CONTROL
708	X-2584-442-1	s	COVER ASSY, HINGE (FRONT)
709	1-480-298-11	s	SWITCH BLOCK, CONTROL(GZ92000)
710	2-630-005-01	s	SCREW(M2), NEW TRUSTER,P2
711	3-056-233-21	s	SCREW (M2), LOCK ACE, P2
712	3-061-234-01	s	NUT (M6X0.5)
713	3-080-206-21	s	SCREW, TAPPING, P2
714	3-278-255-01	s	TAPE (BT)
715	3-288-474-01	s	RUBBER, PANEL RETAINER
716	3-288-538-11	s	SHOE, REAR (COLD)
717	3-678-684-01	o	HOLDER, CABLE
718	4-428-150-01	s	FR-CABINET, HANDLE
719	4-428-161-01	s	COVER,HP JACK
720	4-445-606-01	s	SHEET, EVF HARNESS
	7-627-556-58	s	SCREW +P2.6X5

Handle-2

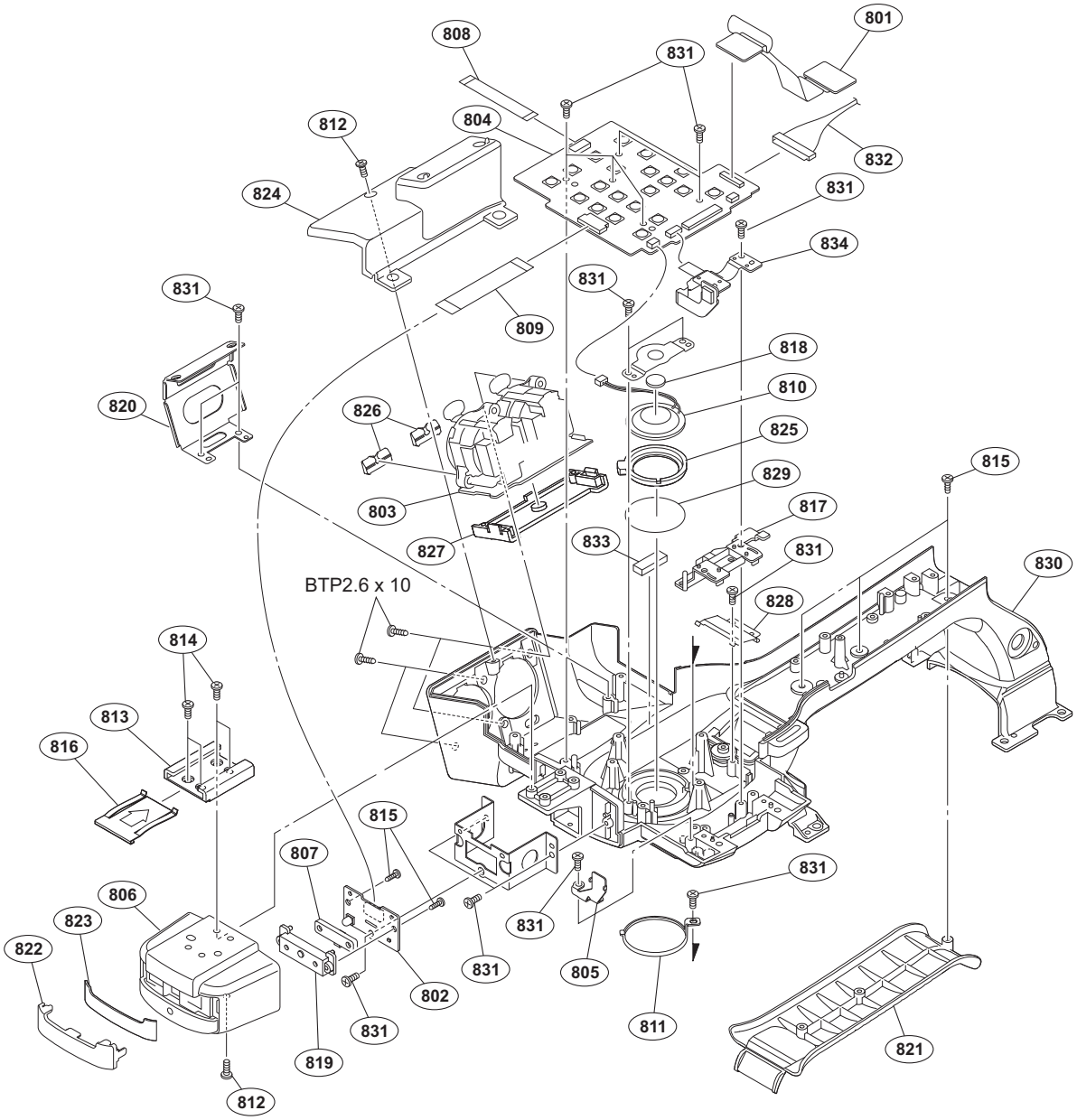

No.	Part No.	SP	Description
801	A-1890-566-A	s	MOUNTED CIRCUIT BOARD, HN-403
802	A-1890-559-A	s	MOUNTED CIRCUIT BOARD, FP-179
803	A-1890-558-A	s	MOUNTED CIRCUIT BOARD, AXM-48
804	A-1890-572-A	s	MOUNTED CIRCUIT BOARD, KSW-62
805	X-2188-609-1	s	FIXED (759) ASSY
806	X-2584-440-1	s	CABINET ASSY, MICROPHONE
807	1-542-862-11	s	MICROPHONE UNIT
808	1-831-666-11	s	CABLE, FLEXIBLE FLAT (15 CORE)
809	1-846-023-11	s	CABLE, FLEXIBLE FLAT (10 CORE)
810	1-858-774-11	s	LOUDSPEAKER (2.0 CM)
811	2-178-566-01	s	GRILLE, SPEAKER
812	2-630-005-01	s	SCREW(M2), NEW TRUSTER, P2
813	3-069-286-03	s	SHOE, ACCESSORY
814	3-080-203-51	s	SCREW(M2), LOCK ACE, P2 (for PMW-200)
	4-432-184-01	s	SCREW (M2), NEW TRUSTER, P2 (for PMW-EX280)
815	3-080-206-21	s	SCREW, TAPPING, P2
816	3-288-615-02	s	SPRING, SHOE
817	4-119-279-01	s	HOLDER, FLEXIBLE
818	4-119-285-01	o	CUSHION, SPEAKER
819	4-428-154-01	s	CASE,MICROPHON
820	4-428-156-01	s	BRACKET, MICROPHONE
821	4-428-157-01	s	GRIP
822	4-428-158-01	s	GRILLE, MICROPHONE
823	4-428-159-01	s	SCREEN, WIND
824	4-428-160-01	s	COVER, XLR
825	4-428-162-01	s	SPEAKER HOLDER
826	4-428-163-04	s	XLR SW KNOB
827	4-428-164-01	s	XLR SW RALL
828	4-428-165-01	s	PLATE LCD GROUND
829	4-428-166-01	s	SCREEN, SPEAKER
830	4-428-167-01	s	HANDLE
831	3-056-233-21	s	SCREW (M2), LOCK ACE, P2
832	1-968-343-11	s	HARNESS (DCP-KSW)
833	4-433-494-01	s	GASKET (F), MAIN
834	A-1890-569-A	s	MOUNTED CIRCUIT BOARD, KSW-61
	7-685-535-19	s	SCREW +BTP 2.6X10 TYPE2 N-S

LCD Assembly

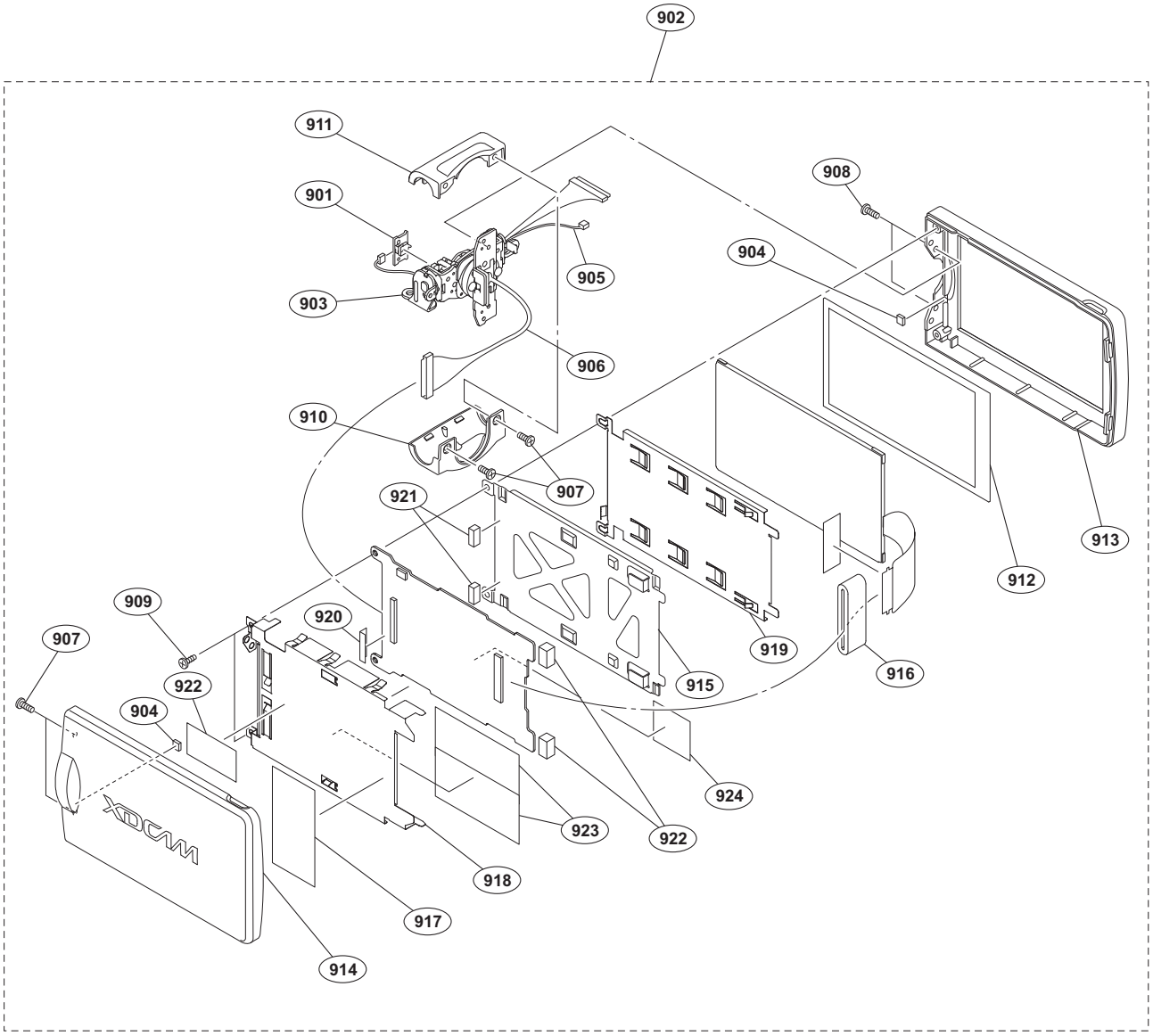

No.	Part No.	SP	Description	No.	Part No.	SP	Description
901	A-1890-571-A	s	MOUNTED CIRCUIT BOARD, DET-55	923	3-878-656-01	s	TAPE 60
902	A-1899-213-A	s	LCD ASSY	924	4-435-864-01	s	TAPE 25
903	X-2342-571-1	s	HINGE (TYPE 07KAI) ASSY, PANEL				
904	1-471-514-11	s	MAGNET (LM-30FH)				
905	1-968-339-11	s	SUB HARNESS (REVERSE-KSW)				
906	1-968-341-11	s	HARNESS (LCD-KSW)				
907	2-630-005-01	s	SCREW (M2), NEW TRUSTER, P2				
908	3-056-233-21	s	SCREW (M2), LOCK ACE, P2				
909	3-080-206-21	s	SCREW, TAPPING, P2				
910	3-288-566-21	s	CABINET (T), PANEL HINGE				
911	3-288-567-21	s	CABINET (B), PANEL HINGE				
912	4-428-128-01	s	CUSHION, PANEL				
913	4-428-129-02	s	BEZEL, LCD				
914	4-428-130-01	s	CABINET LCD				
915	4-428-134-01	s	RETAINER, PANEL				
916	1-482-034-11	s	CORE, FERRITE				
917	3-878-657-01	s	TAPE 50				
918	4-429-227-01	s	PLATE, LCD SHIELD				
919	4-429-228-01	s	PLATE, PANEL GROUND				
920	3-278-255-01	s	TAPE (BT)				
921	4-435-866-01	s	GASKET (H), MAIN				
922	4-446-007-01	s	GASKET MAIN N				

EVF Assembly

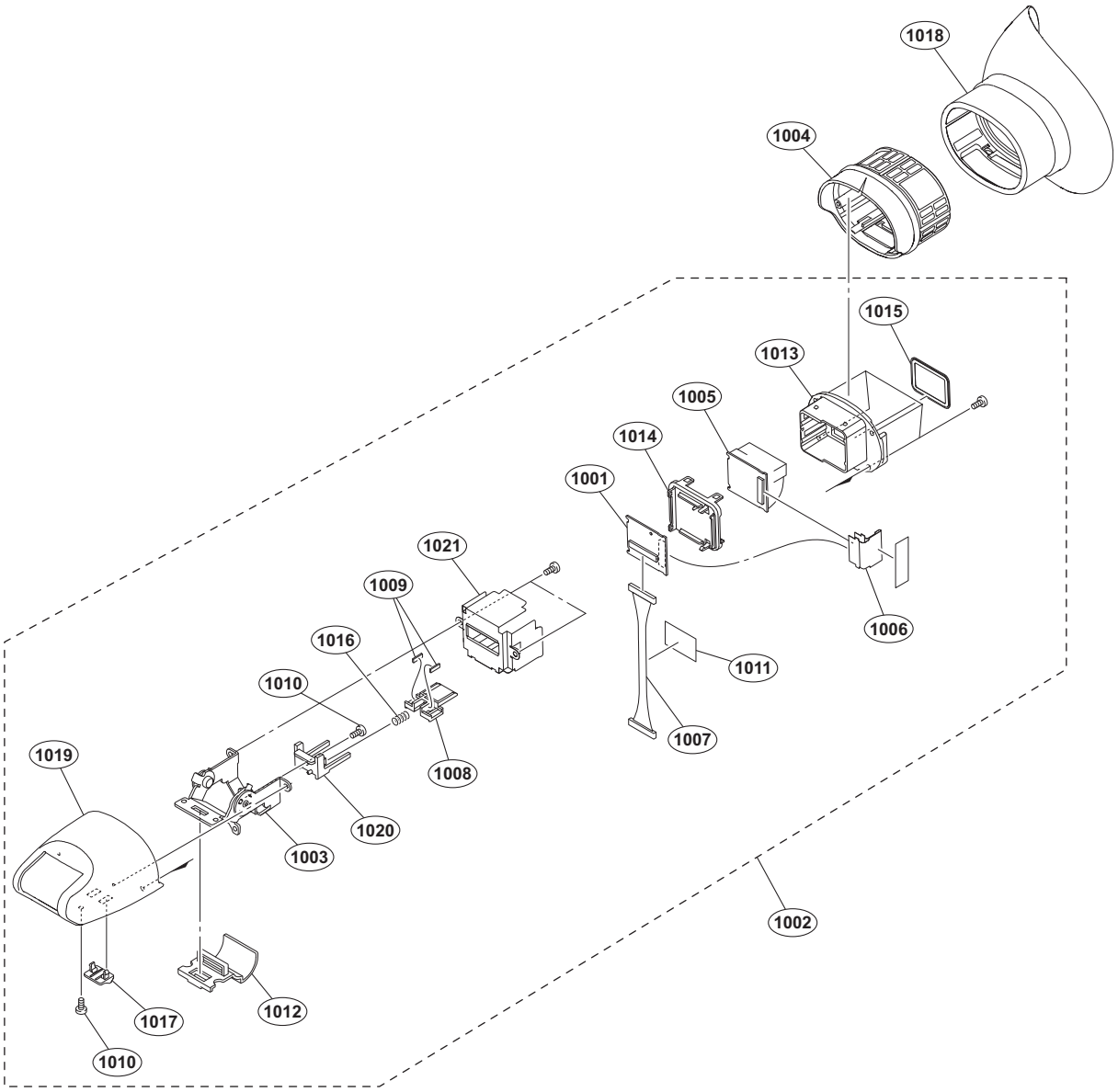

No.	Part No.	SP	Description
1001	A-1885-810-A	s	MOUNTED CIRCUIT BOARD, HN-398
1002	A-1899-212-A	s	EVF FRONT ASSY
1003	X-2515-729-1	s	HINGE ASSY
1004	X-2515-730-7	s	LOUPE ASSY
1005	1-811-033-11	s	LCD MODULE
1006	1-873-733-11	s	PWB, FP-776 FLEXIBLE
1007	1-966-921-11	s	HARNESS (COAXIAL CABLE)
1008	2-179-390-01	s	HOOK, VF LOCK
1009	3-060-588-01	s	SPACER, LOCK
1010	3-080-203-31	s	SCREW(M2), LOCK ACE,P2
1011	3-278-255-01	s	TAPE (BT)
1012	3-278-317-02	s	FPC GUIDE
1013	3-288-585-01	s	CASE, PANEL
1014	3-288-586-02	s	LID, PANEL
1015	3-288-591-01	s	SHEET, VF PROTECTION
1016	3-302-492-01	s	SPRING, COMPRESSION
1017	3-963-822-12	s	KNOB, LOCK
1018	4-164-856-01	s	EYE CUP
1019	4-164-591-02	s	CABINET EVF
1020	4-164-592-01	s	GUIDE LOCK LEVER
1021	4-445-605-01	s	PLATE, EVF GROUND

Chassis-1

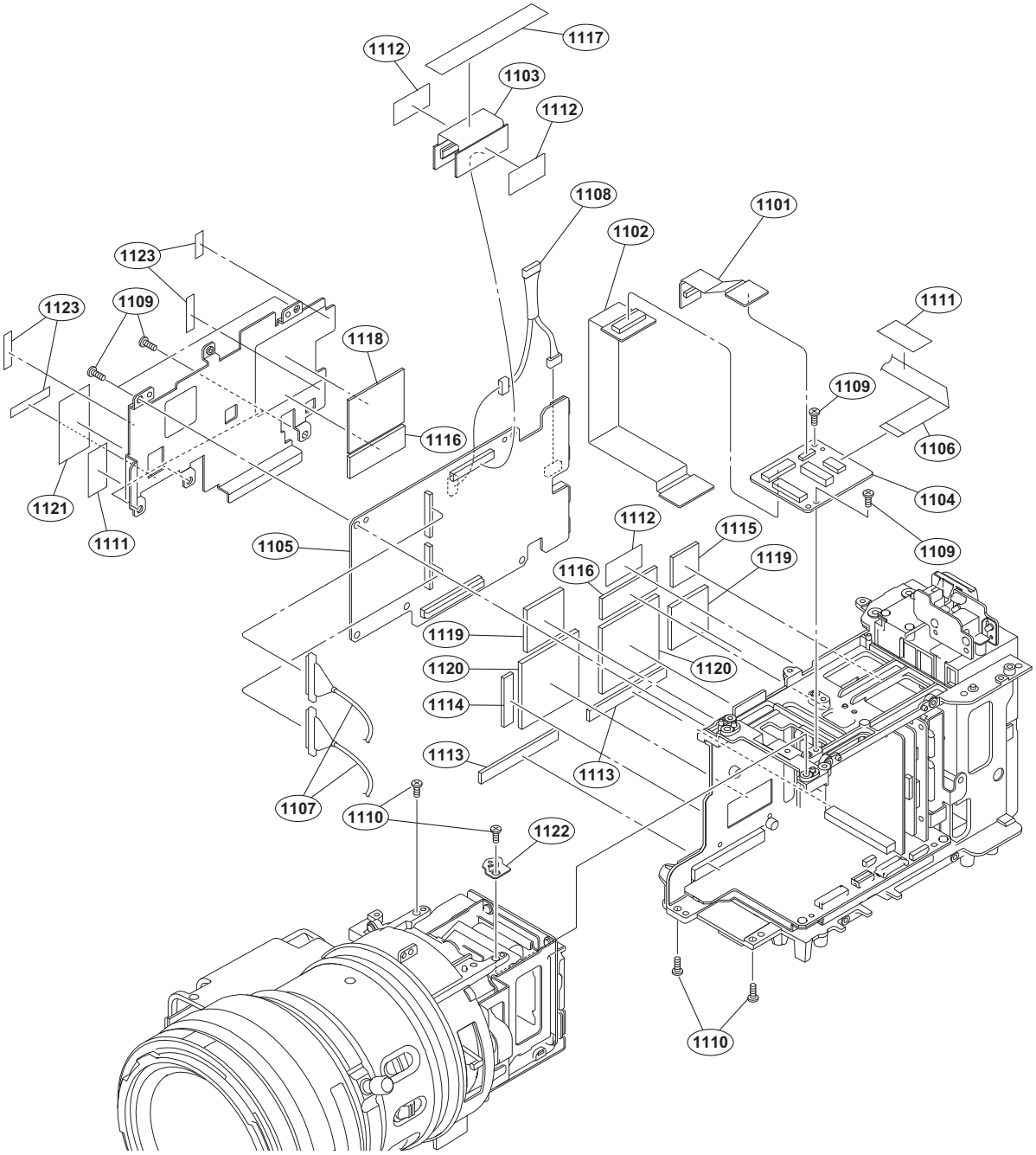

No.	Part No.	SP	Description
1101	A-1864-817-A	s	MOUNTED CIRCUIT BOARD, HN-387
1102	A-1864-824-A	s	MOUNTED CIRCUIT BOARD, HN-386
1103	A-1864-828-A	s	MOUNTED CIRCUIT BOARD, HN-384
1104	A-1864-829-A	s	MOUNTED CIRCUIT BOARD, IF-1182
1105	A-1886-114-A	s	MOUNTED CIRCUIT BOARD, DPR-343
1106	1-846-056-21	s	CABLE, FLEXIBLE FLAT (10 CORE)
1107	1-968-346-11	s	HARNESS (DPR-EC/SWC)
1108	1-968-640-11	s	SUB HARNESS (USB_IF)
1109	3-056-233-21	s	SCREW (M2), LOCK ACE, P2
1110	3-694-181-03	s	TYPE1, AROCK PRECISION +P2.6X5
1111	3-278-255-01	s	TAPE (BT)
1112	4-427-941-01	s	CUSHION CONNECTOR (MAIN)
1113	4-427-949-02	s	RADIATION SHEET A
1114	4-427-950-02	s	RADIATION SHEET B
1115	4-427-951-02	s	RADIATION SHEET C
1116	4-427-952-02	s	RADIATION SHEET D
1117	1-500-921-11	s	FERRITE CORE
1118	4-427-953-01	s	RADIATION SHEET E
1119	4-427-954-01	s	RADIATION SHEET F
1120	4-427-955-01	s	RADIATION_SHEET_G
1121	4-433-495-01	s	TAPE, DCP CONDUCTIVE
1122	4-441-556-01	s	BRACKET, FRONT
1123	4-446-010-01	s	CUSHION MAIN A

Chassis-2

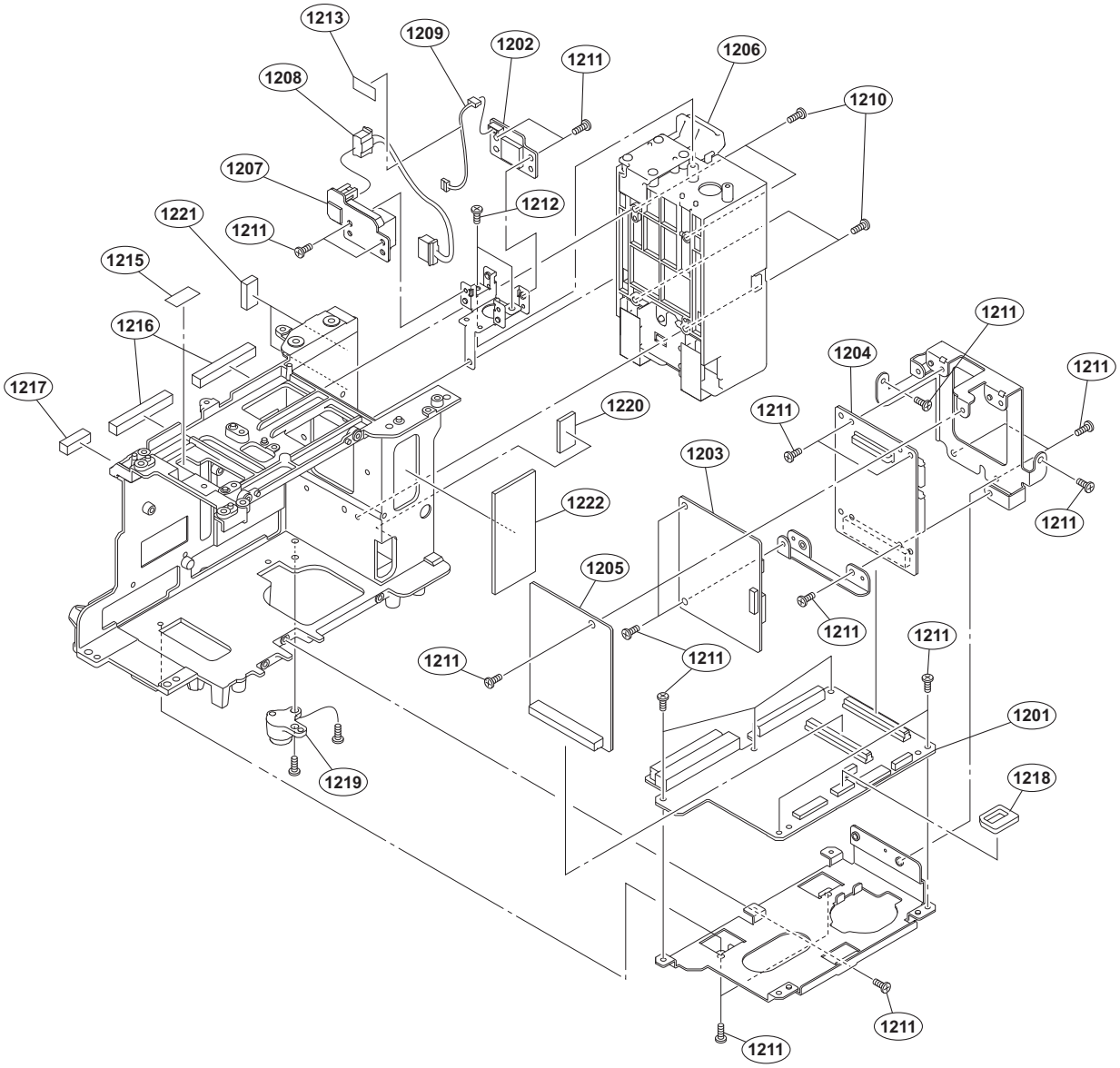

No.	Part No.	SP	Description
1201	A-1864-808-B	s	MOUNTED CIRCUIT BOARD, AU-342
1202	A-1864-816-A	s	MOUNTED CIRCUIT BOARD, PSW-97
1203	A-1869-162-A	s	MOUNTED CIRCUIT BOARD, RE-298
1204	A-1869-163-A	s	MOUNTED CIRCUIT BOARD, RE-299
1205	A-1869-164-A	s	MOUNTED CIRCUIT BOARD, RE-300
1206	A-1881-601-A	s	BATTERY CASE SUB ASSY
1207	A-1888-872-A	s	MOUNTED CIRCUIT BOARD, DC-167
1208	1-968-344-11	s	SUB HARNESS (EXT DC-RE299)
1209	1-968-345-11	s	SUB HARNESS (PSW-RE298)
1210	2-630-005-01	s	SCREW(M2),NEW TRUSTER,P2
1211	3-056-233-21	s	SCREW (M2), LOCK ACE, P2
1212	3-080-206-21	s	SCREW, TAPPING, P2
1213	3-278-255-01	s	TAPE (BT)
1215	4-427-941-01	s	CUSHION CONNECTOR(MAIN)
1216	4-427-942-01	s	GASKET MAIN A
1217	4-427-943-01	s	GASKET MAIN B
1218	4-430-771-01	s	CN GUARD
1219	4-445-608-01	s	TAP, ACCESSORY
1220	4-435-867-01	s	GASKET (J), MAIN
1221	4-446-008-01	s	GASKET MAIN P
1222	4-446-009-01	s	GASKET MAIN Q

Lens Block Assembly

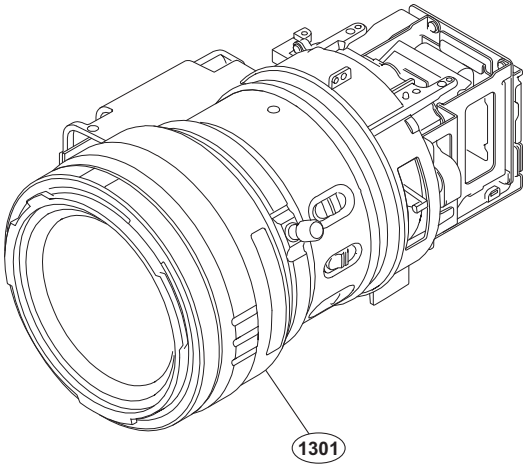

No.	Part No.	SP	Description
1301	A-1911-477-A	s	FRONT ASSEMBLY (RP)

5-3. Electrical Parts List

AU-342 BOARD

Ref. No. or Q'ty	Part No.	SP	Description
1pc	A-1864-808-B	s	MOUNTED CIRCUIT BOARD, AU-342
BT700	1-756-991-21	s	HOLDER, LITHIUM BATTERY (CR203
CN100	1-817-820-11	s	CONNECTOR, BOARD TO BOARD 30P
CN103	1-774-260-31	s	CONNECTOR, FFC/FPC(ZIF) AN 20P
CN500	1-784-254-21	s	CONNECTOR 10P
CN600	1-764-080-21	o	PIN, CONNECTOR (PC BOARD) 8P

AXM-48 BOARD

Ref. No. or Q'ty	Part No.	SP	Description
1pc	A-1890-558-A	s	MOUNTED CIRCUIT BOARD, AXM-48
CN1	1-794-099-13	s	CONNECTOR, ROUND TYPE
CN2	1-794-099-13	s	CONNECTOR, ROUND TYPE
CN3	1-785-840-31	s	CONNECTOR, FFC/FPC(ZIF) AN 15P

CN-3540 BOARD

Ref. No. or Q'ty	Part No.	SP	Description
1pc	A-1885-814-A	s	MOUNTED CIRCUIT BOARD, CN-3540
CN101	1-778-646-31	s	CONNECTOR, FFC/FPC(ZIF) ST 10P
CN102	1-778-646-31	s	CONNECTOR, FFC/FPC(ZIF) ST 10P
CN103	1-816-113-21	s	CONNECTOR 15P
CN104	1-779-806-21	s	CONNECTOR 8P

DC-167 BOARD

Ref. No. or Q'ty	Part No.	SP	Description
1pc	A-1888-872-A	s	MOUNTED CIRCUIT BOARD, DC-167
CN100	1-764-250-21	s	PIN, CONNECTOR (PC BOARD) 4P
CN101	1-793-459-11	s	JACK,DC(POLARITY UNIFIED TYPE)

DCP-56 BOARD

Ref. No. or Q'ty	Part No.	SP	Description
1pc	A-1886-115-A	s	MOUNTED CIRCUIT BOARD, DCP-56
CN007	1-816-113-21	s	CONNECTOR 15P
CN2200	1-764-243-31	o	CONNECTOR (COAXIAL)
CN2201	1-778-646-31	s	CONNECTOR, FFC/FPC(ZIF) ST 10P
THP100 ⚠	1-771-845-21	s	THERMISTOR, POSITIVE

DET-55 BOARD

Ref. No. or Q'ty	Part No.	SP	Description
1pc	A-1890-571-A	s	MOUNTED CIRCUIT BOARD, DET-55
CN100	1-794-375-21	s	PIN, CONNECTOR 2P

DPR-343 BOARD

Ref. No. or Q'ty	Part No.	SP	Description
1pc	A-1886-114-A	s	MOUNTED CIRCUIT BOARD, DPR-343
CN1100	1-818-513-21	s	CONNECTOR (SQUARE TYPE)(USB)5P
CN1300	1-794-276-21	o	CONNECTOR, SQUARE TYPE 4P
CN2200	1-818-513-21	s	CONNECTOR (SQUARE TYPE)(USB)5P
CN2500	1-815-794-13	s	CONNECTOR (MULTIPLE)
CN2501	1-770-621-21	s	PIN, CONNECTOR 4P
CN2502	1-770-623-21	s	PIN, CONNECTOR 6P

DR-670 BOARD

Ref. No. or Q'ty	Part No.	SP	Description
1pc	A-1885-809-A	s	MOUNTED CIRCUIT BOARD, DR-670
CN101	1-822-221-11	o	CONNECTOR, COAXIAL(RECEPTACLE)

EC-75 BOARD

Ref. No. or Q'ty	Part No.	SP	Description
1pc	A-1891-131-A	s	MOUNTED CIRCUIT BOARD, EC-75
1pc	1-821-531-13	s	CONNECTOR, EX CARD(GUIDE UNIT)
CN101	1-821-530-12	s	CONNECTOR, EX CARD (HOST)

FP-179 BOARD

Ref. No. or Q'ty	Part No.	SP	Description
1pc	A-1890-559-A	s	MOUNTED CIRCUIT BOARD, FP-179
CN100	1-822-910-11	o	CONNECTOR, FPC (LIF(NON-ZIF))
CN101	1-778-646-31	s	CONNECTOR, FFC/FPC(ZIF) ST 10P

HN-384 BOARD

Ref. No. or Q'ty	Part No.	SP	Description
1pc	A-1864-828-A	s	MOUNTED CIRCUIT BOARD, HN-384

HN-386 BOARD

Ref. No. or Q'ty	Part No.	SP	Description
1pc	A-1864-824-A	s	MOUNTED CIRCUIT BOARD, HN-386

HN-387 BOARD

Ref. No. or Q'ty	Part No.	SP	Description
1pc	A-1864-817-A	s	MOUNTED CIRCUIT BOARD, HN-387
CN101	1-817-820-11	s	CONNECTOR, BOARD TO BOARD 30P

HN-398 BOARD

Ref. No. or Q'ty	Part No.	SP	Description
1pc	A-1885-810-A	s	MOUNTED CIRCUIT BOARD, HN-398
CN001	1-817-623-61	o	CONNECTOR, FPC (ZIF) 45P
CN002	1-822-221-11	o	CONNECTOR, COAXIAL(RECEPTACLE)

HN-399 BOARD

Ref. No. or Q'ty	Part No.	SP	Description
1pc	A-1885-811-A	s	MOUNTED CIRCUIT BOARD, HN-399
CN102	1-816-113-21	s	CONNECTOR 15P

HN-403 BOARD

Ref. No. or Q'ty	Part No.	SP	Description
1pc	A-1890-566-A	s	MOUNTED CIRCUIT BOARD, HN-403

HN-404 BOARD

Ref. No. or Q'ty	Part No.	SP	Description
1pc	A-1890-567-A	s	MOUNTED CIRCUIT BOARD, HN-404

IF-1182 BOARD

Ref. No. or Q'ty	Part No.	SP	Description
1pc	A-1864-829-A	s	MOUNTED CIRCUIT BOARD, IF-1182
CN103	1-778-645-31	s	CONNECTOR, FFC/FPC(ZIF) AN 10P

IF-1188 BOARD

Ref. No. or Q'ty	Part No.	SP	Description
CN200	1-843-070-61	s	CONNECTOR, FPC(LIF (NON-ZIF))
CN300	1-842-522-21	o	CONNECTOR, FPC (ZIF) 61P
PS100 ⚠	1-576-122-21	s	LINK, IC (0.4A/72V)
PS101 ⚠	1-576-122-21	s	LINK, IC (0.4A/72V)

IO-254 BOARD

Ref. No. or Q'ty	Part No.	SP	Description
1pc	A-1885-813-A	s	MOUNTED CIRCUIT BOARD, IO-254
CN100	1-770-627-21	s	PIN, CONNECTOR 10P
CN101	1-817-109-11	s	CONNECTOR, USB (A)

IO-255 BOARD

Ref. No. or Q'ty	Part No.	SP	Description
1pc	A-1888-558-A	s	MOUNTED CIRCUIT BOARD, IO-255
CN100	1-766-380-11	s	CONNECTOR, COAXIAL (BNC TIPE)
CN101	1-766-380-11	s	CONNECTOR, COAXIAL (BNC TIPE)
CN102	1-750-337-61	s	CONNECTOR, FFC/FPC (ZIF) 10P

KSW-61 BOARD

Ref. No. or Q'ty	Part No.	SP	Description
1pc	A-1890-569-A	s	MOUNTED CIRCUIT BOARD, KSW-61

KSW-62 BOARD

Ref. No. or Q'ty	Part No.	SP	Description
1pc	A-1890-572-A	s	MOUNTED CIRCUIT BOARD, KSW-62
CN100	1-778-645-31	s	CONNECTOR, FFC/FPC(ZIF) AN 10P
CN101	1-785-840-31	s	CONNECTOR, FFC/FPC(ZIF) AN 15P
CN102	1-794-375-21	s	PIN, CONNECTOR 2P
CN403	1-794-375-21	s	PIN, CONNECTOR 2P
CN404	1-816-643-61	s	FFC/FPC CONNECTOR (LIF) 10P

PSW-97 BOARD

Ref. No. or Q'ty	Part No.	SP	Description
1pc	A-1864-816-A	s	MOUNTED CIRCUIT BOARD, PSW-97

RE-298 BOARD

Ref. No. or Q'ty	Part No.	SP	Description
1pc	A-1869-162-A	s	MOUNTED CIRCUIT BOARD, RE-298
CN201	1-816-463-21	s	PIN, CONNECTOR (PC BOARD) 10P
CN202	1-794-376-21	s	PIN, CONNECTOR 4P
THP100 ⚠	1-803-615-21	s	THERMISTOR, POSITIVE

RE-299 BOARD

Ref. No. or Q'ty	Part No.	SP	Description
1pc	A-1869-163-A	s	MOUNTED CIRCUIT BOARD, RE-299
CN100	1-774-297-21	s	PIN, CONNECTOR (PC BOARD) 7P
CN101	1-750-005-21	o	PIN, CONNECTOR (PC BOARD) 4P
F100 ⚠	1-576-329-21	s	FUSE (SMD) (10A/125V)

RE-300 BOARD

Ref. No. or Q'ty	Part No.	SP	Description
1pc	A-1869-164-A	s	MOUNTED CIRCUIT BOARD, RE-300
THP100 ⚠	1-803-615-21	s	THERMISTOR, POSITIVE

RM-237 BOARD

Ref. No. or Q'ty	Part No.	SP	Description
1pc	A-1890-560-A	s	MOUNTED CIRCUIT BOARD, RM-237
CN101	1-794-525-12	s	JACK, MIC

RM-238 BOARD

Ref. No. or Q'ty	Part No.	SP	Description
1pc	A-1890-561-A	s	MOUNTED CIRCUIT BOARD, RM-238
CN101	1-573-915-71	s	CONNECTOR, FFC/FPC (ZIF) 6P

SW-1559 BOARD

Ref. No. or Q'ty	Part No.	SP	Description
1pc	A-1885-812-A	s	MOUNTED CIRCUIT BOARD, SW-1559
CN104	1-818-210-21	s	PIN, CONNECTOR 2P

SW-1573 BOARD

Ref. No. or Q'ty	Part No.	SP	Description
1pc	A-1885-984-A	s	MOUNTED CIRCUIT BOARD, SW-1573
CN100	1-815-597-31	s	CONNECTOR, FFC/FPC (ZIF) AN 6P

SW-1575 BOARD

Ref. No. or Q'ty	Part No.	SP	Description
1pc	A-1888-560-A	s	MOUNTED CIRCUIT BOARD, SW-1575
CN100	1-794-375-21	s	PIN, CONNECTOR 2P

SW-1577 BOARD

Ref. No. or Q'ty	Part No.	SP	Description
1pc	A-1890-562-A	s	MOUNTED CIRCUIT BOARD, SW-1577
CN100	1-778-647-31	s	CONNECTOR, FFC/FPC(ZIF) ST 15P
CN101	1-778-646-31	s	CONNECTOR, FFC/FPC(ZIF) ST 10P

SW-1578 BOARD

Ref. No. or Q'ty	Part No.	SP	Description
1pc	A-1890-563-A	s	MOUNTED CIRCUIT BOARD, SW-1578
CN100	1-817-583-61	s	CONNECTOR, FFC/FPC 5P

SW-1579 BOARD

Ref. No. or Q'ty	Part No.	SP	Description
1pc	A-1890-564-A	s	MOUNTED CIRCUIT BOARD, SW-1579

SWC-54 BOARD

Ref. No. or Q'ty	Part No.	SP	Description
1pc	A-1888-559-A	s	MOUNTED CIRCUIT BOARD, SWC-54
1pc	1-821-531-13	s	CONNECTOR, EX CARD(GUIDE UNIT)
CN100	1-774-260-31	s	CONNECTOR, FFC/FPC(ZIF) AN 20P
CN101	1-785-840-31	s	CONNECTOR, FFC/FPC(ZIF) AN 15P
CN102	1-573-915-71	s	CONNECTOR, FFC/FPC (ZIF) 6P
CN103	1-815-597-31	s	CONNECTOR, FFC/FPC (ZIF) AN 6P
CN104	1-794-375-21	s	PIN, CONNECTOR 2P
CN105	1-818-210-21	s	PIN, CONNECTOR 2P
CN301	1-821-530-12	s	CONNECTOR, EX CARD (HOST)

VR-350 BOARD

Ref. No. or Q'ty	Part No.	SP	Description
1pc	A-1890-568-A	s	MOUNTED CIRCUIT BOARD, VR-350
CN101	1-778-645-31	s	CONNECTOR, FFC/FPC(ZIF) AN 10P

5-4. Supplied Accessories

Q'ty	Part No.	SP	Description
1pc	1-479-570-14	s	REMOTE COMMANDER (RM-F300)
1pc	1-482-017-11	s	CLAMP, FERRITE
1pc	⚠ 1-757-562-11	s	CORD, POWER (For PMW-200 (UC))
1pc	⚠ 1-782-476-14	s	CORD, POWER (For PMW-EX280 (CN))
1pc	1-831-553-22	s	CORD, CONNECTION (AV MULTIPLE)
1pc	1-837-287-21	s	CORD, CONNECTION (USB 5P)
1pc	3-278-903-01	s	SHORUDER BELT
1pc	4-164-856-01	s	EYE CUP
1pc	4-268-461-05	s	CD-ROM (UTILITY SOFTWARE)
1pc	⚠ 4-425-716-03	s	MANUAL, INSTRUCTION (Japanese) (For PMW-200 (J))
1pc	⚠ 4-425-716-13	s	MANUAL, INSTRUCTION (English) (For PMW-200 (UC), (CE), (E))
1pc	⚠ 4-425-716-21	s	MANUAL, INSTRUCTION (Chinese) (For PMW-EX280 (CN))
1pc	⚠ 4-425-718-03	s	CD-ROM (INSTRUCTION MANUAL) (For PMW-200 (UC), (CE), (E))
1pc	4-446-349-01	s	BRACKET, WIFI
1pc	4-446-827-01	s	HOLDER, MICROPHONE CABLE
1pc	7-627-556-58	s	SCREW +P 2.6X5

Viditec
Humberto 1º 2889 - C1231ACE - Bs As, Argentina
Tel: +54 11 4122-1200 Fax: +54 11 4308-5493
ingenieria@viditec.com.ar
viditec.com